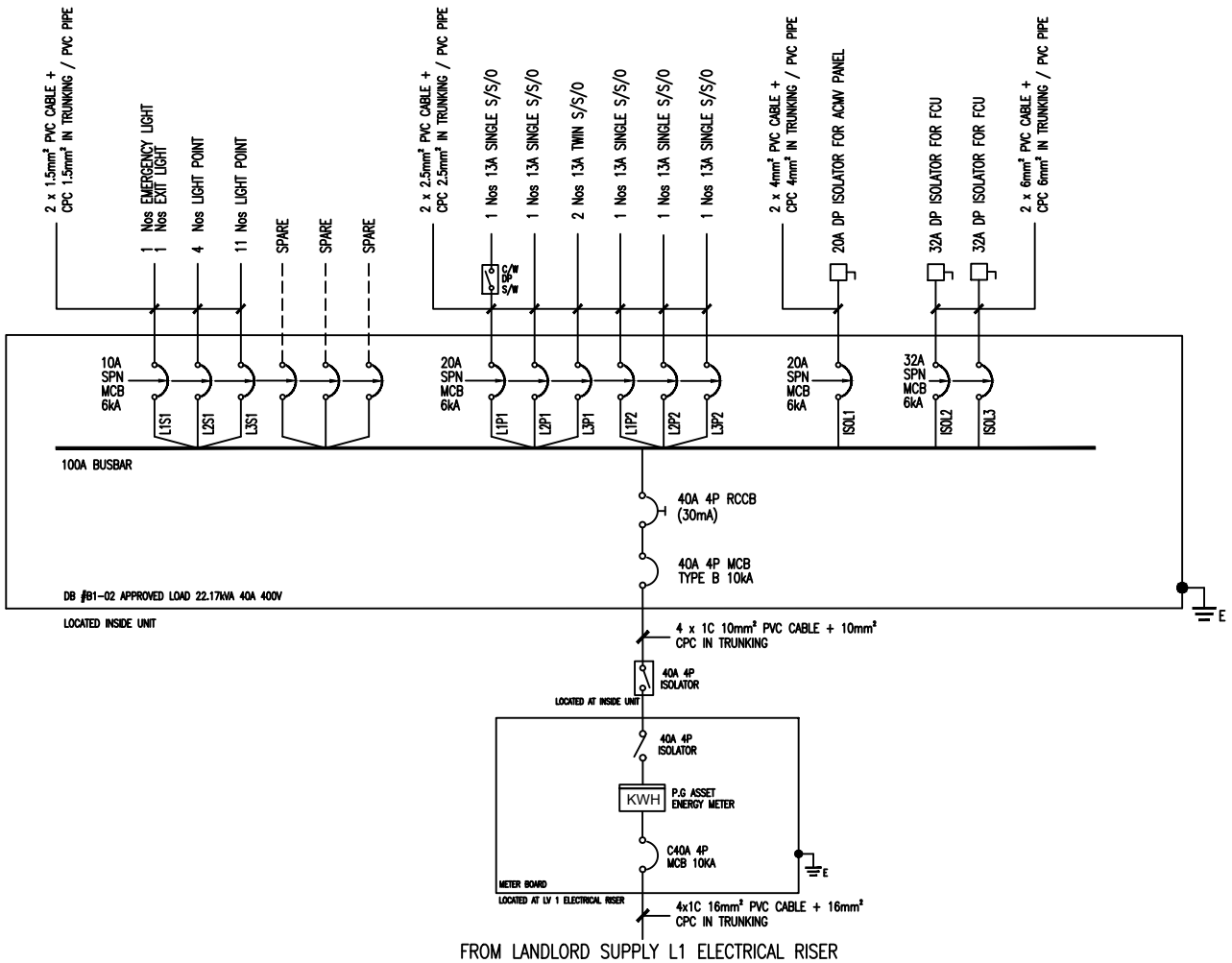

EMA LICENCED ELECTRICAL WORKER
TECHNICIAN
NYAP JUNN YEAN
8/33613
SINGAPORE

CLIENT / ADDRESS :	MAIN CONTRACTOR :	ELECTRICAL CONTRACTOR :	DRAWING TITLE :	LEW :	CHECKED :	DATE :
SOCIAL FIGHT COLLECTIVE PTE LTD 4 Jalan Mat Jambol #B01-02 Singapore 119554		I2R M&E PTE. LTD. 709 Yishun Avenue 5 #01-K1 Singapore 760709 TEL: 9777 1983	SINGLE LINE DIAGRAM (SLD)	Ryan, Nyap Junn Yean EMA Licence No. : 8/33613 Mobile Number. : 91597207	Ryan	22 APR 2025
					DRAWING NO. : I2R-SFC-BIJ-SLD02	REV : 0